Gear case and Driving apparatus	Date : 06. Mar, 2015	Revision : 00	Page : 1/1
Brand : DORmak	Model : DK35SW	Product Code : 193180	

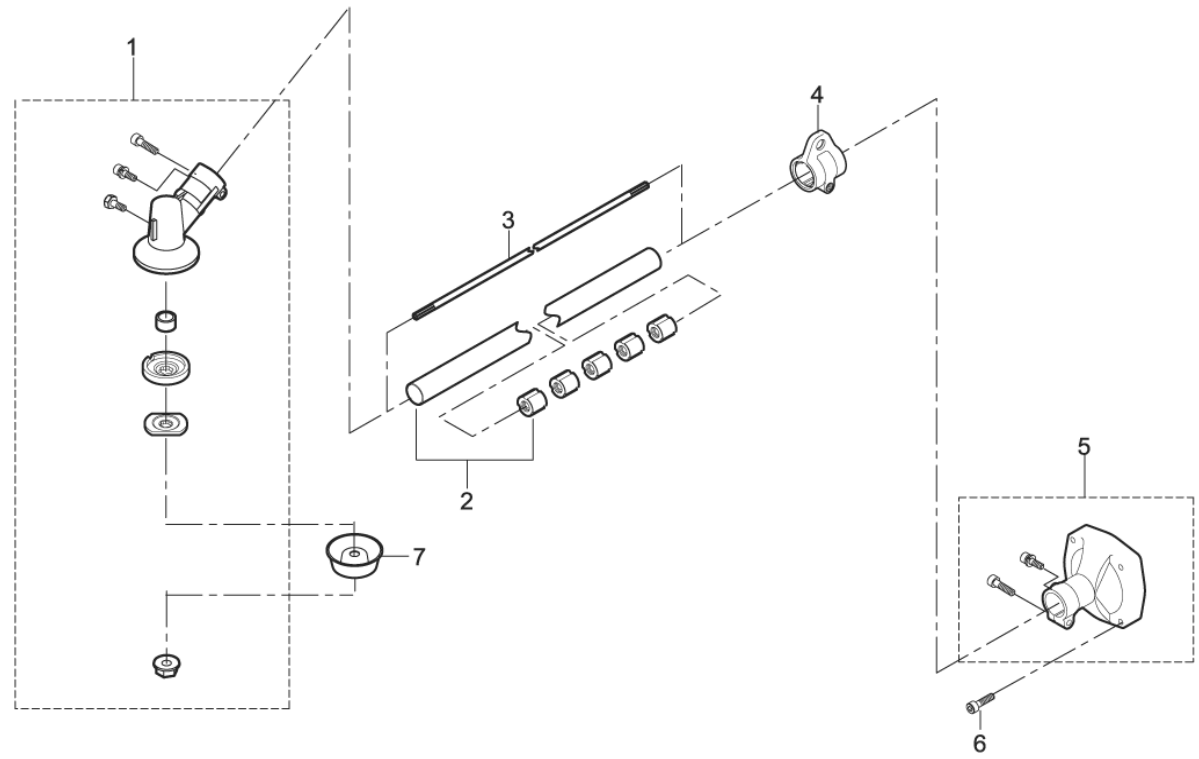

Gear case and Driving apparatus

Brand: DORmak

P.cd: 193180

Date: 6-Mar-2015

Revision: 00

(A): DK35SW

(B):

(C):

Ref.No	Parts.No	Parts.Name	Q'ty (A)	Q'ty (B)	Q'ty (C)	Remarks	Recomm(%) Lot.100
1	71008-319	GEAR CASE ASS'Y	1				1
2	71130-131	MAIN PIPE C.P.	1				1
3	64011-234	MAIN SHAFT	1				3
4	71012-146	HANGER BAND ASS'Y	1				1
5	71010-140-104	CLUTCH CASE ASS'Y	1				1
6	416N0635	SOCKET SCREW	4				1
7	11027-119	STABILIZER	1				5