Gear case and Driving apparatus	Date : 30. Apr, 2015	Revision : 00	Page : 1/1
Brand : DORMAK	Model : DK27S	Product Code : 220324	

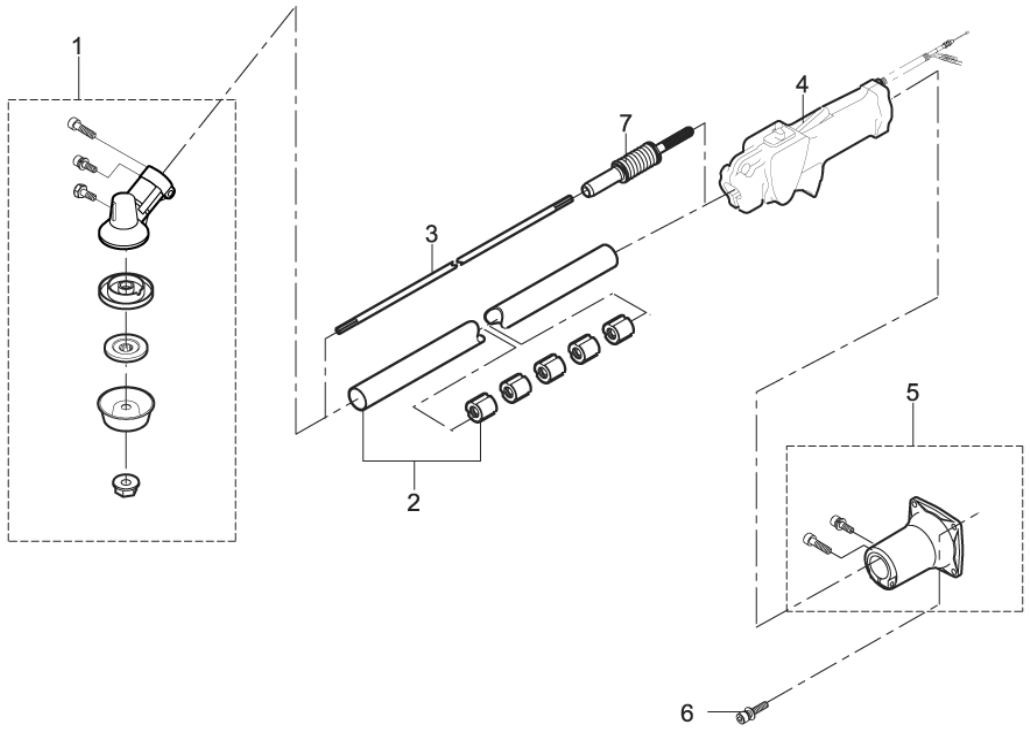

Gear case and Driving apparatus

Brand: DORMAK
P.cd: 220324
Date: 30-Apr-2015
Revision: 00
(A): DK27S
(B):
(C):

Ref.No	Parts.No	Parts.Name	Q'ty (A)	Q'ty (B)	Q'ty (C)	Remarks	Recomm(%) Lot.100
1	71008-357	GEAR CASE ASS'Y	1				1
2	71130-174	MAIN PIPE C.P.	1				1
3	64011-296	MAIN SHAFT	1				3
4	71056-285	THROTTLE LEVER ASS'Y	1				1
5	71010-246	CLUTCH CASE ASS'Y	1				1
6	416N0620	SOCKET SCREW	4				1
7	71335-102	DAMPER ASS'Y	1				3