| Gear case and Driving apparatus | *Date :* 23. Mar. 2016 | *Revision :* 00 | *Page :* 1/1 |
|---|---|---|---|
| *Brand :* DORmak | *Model :* DK53 PRO | *Product Code :* 223144 | |

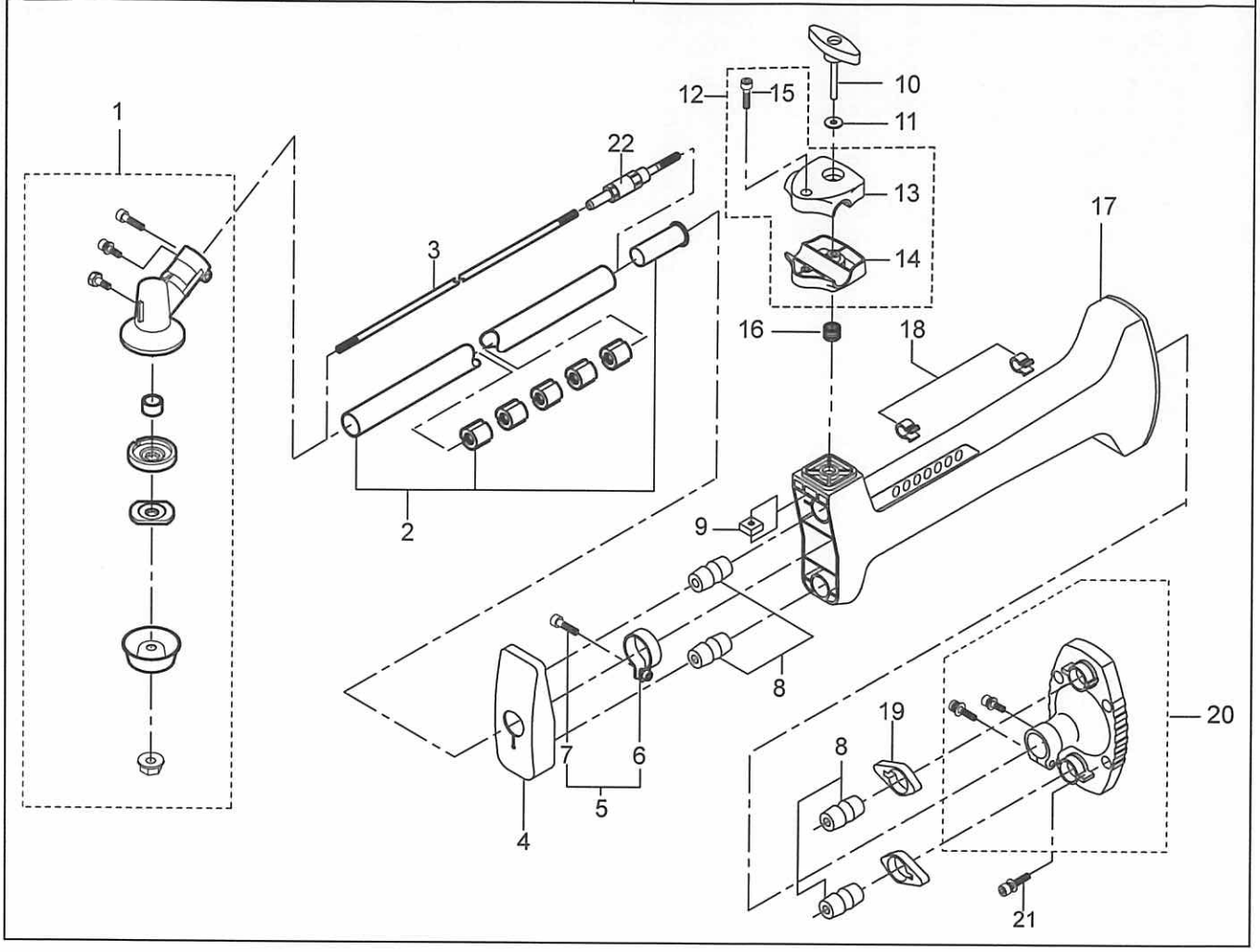

Gear case and Driving apparatus

Brand: DORmak
P.cd: 223144

Date: 23-Mar-2016
Revision: 00

(A): DK53 PRO
(B):
(C):

| Ref.No | Parts.No | Parts.Name | Q'ty (A) | Q'ty (B) | Q'ty (C) | Remarks | Recomm(%) Lot.100 |
|---|---|---|---|---|---|---|---|
| 1 | 71008-372 | GEAR CASE ASS'Y | 1 | | | | 1 |
| 2 | 71130-218 | MAIN PIPE C.P. | 1 | | | | 1 |
| 3 | 64011-293 | MAIN SHAFT | 1 | | | | 3 |
| 4 | 36042-115 | PIPE SUPPORT | 1 | | | | 1 |
| 5 | 11138-104 | BAND C.P. | 1 | | | | 1 |
| 6 | 36071-138 | BAND | 1 | | | | 1 |
| 7 | 412N0615 | SOCKET SCREW | 1 | | | | 1 |
| 8 | 36005-179 | RUBBER | 4 | | | | 1 |
| 9 | 31058-171 | HEXAGON NUT | 1 | | | | 1 |
| 10 | 11117-114 | LOCK HANDLE | 1 | | | | 1 |
| 11 | 68036-152 | WASHER (6.5x18x1.6) | 1 | | | | 1 |
| 12 | 71011-162-104 | HANDLE JOINT ASS'Y | 1 | | | | 1 |
| 13 | 51009-147-104 | HANDLE JOINT(A) | 1 | | | | 1 |
| 14 | 51010-150-104 | HANDLE JOINT(B) | 1 | | | | 1 |
| 15 | 412N0625 | SOCKET SCREW | 1 | | | | 1 |
| 16 | 68013-370 | SPRING | 1 | | | | 1 |
| 17 | 36042-115 | JOINT SUPPORT | 1 | | | | 3 |
| 18 | 51002-125 | WIRE HOLDER | 2 | | | | 1 |
| 19 | 36006-129 | ABSORBER | 2 | | | | 1 |
| 20 | 71010-310 | CLUTCH CASE ASS'Y | 1 | | | | 1 |
| 21 | 416N0625 | SOCKET SCREW | 4 | | | | 1 |
| 22 | 71335-101 | DAMPER ASS'Y | 1 | | | | 3 |
| | | | | | | | |
| | | | | | | | |

| Handle and Fitting | *Date :* 23. Mar. 2016 | *Revision :* 00 | *Page :* 1/1 |
|---|---|---|---|
| *Brand :* DORmak | *Model :* DK53 PRO | *Product Code :* 223144 | |

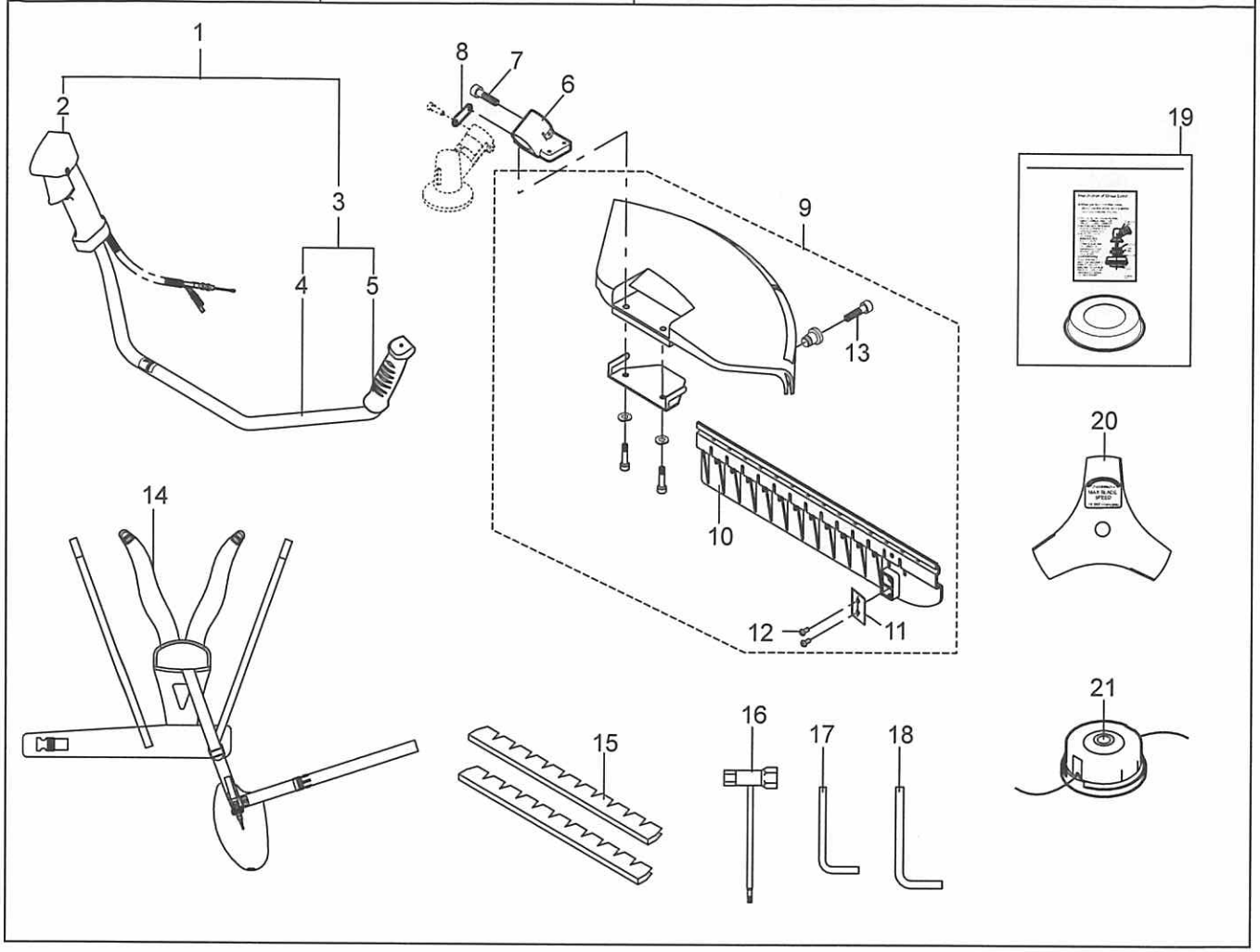

Handle and Fitting

Brand: DORmak
P.cd: 223144

Date: 23-Mar-2016
Revision: 00

(A): DK53 PRO
(B):
(C):

| Ref.No | Parts.No | Parts.Name | Q'ty (A) | Q'ty (B) | Q'ty (C) | Remarks | Recomm(%) Lot.100 |
|---|---|---|---|---|---|---|---|
| 1 | 71014-461 | HANDLE ASS'Y | 1 | | | | 1 |
| 2 | 71056-291 | THROTTLE LEVER ASS'Y | 1 | | | | 1 |
| 3 | 71014-396 | HANDLE ASS'Y | 1 | | | | 1 |
| 4 | 51024-177 | DOUBLE HANDLE | 1 | | | | 1 |
| 5 | 36007-156 | HANDLE GRIP | 1 | | | | 1 |
| 6 | 11113-372-104 | STAY | 1 | | | | 1 |
| 7 | 412N0520 | SOCKET SCREW | 1 | | | | 1 |
| 8 | 91049-121-104 | CONNECTOR | 1 | | | | 1 |
| 9 | 71303-132 | SAFETY GUARD SET | 1 | | | | 3 |
| 10 | 36068-220 | GUARD | 1 | | | | 3 |
| 11 | 91014-185 | BLADE | 1 | | | | 3 |
| 12 | 474L0410 | (+)TAPPING SCREW | 2 | | | | 3 |
| 13 | 412N0515 | SOCKET SCREW | 1 | | | | 3 |
| 14 | 36063-204 | SHOULDER BAND | 1 | | | | 1 |
| 15 | 36044-107 | BLADE COVER | 1 | | | | 1 |
| 16 | 66006-117 | BOX SPANNER (17x19) | 1 | | | | 1 |
| 17 | 66007-103 | L WRENCH (4) | 1 | | | | 1 |
| 18 | 66007-104 | L WRENCH (5) | 1 | | | | 1 |
| 19 | 71001-124 | GRASS COVER SET | 1 | | | | 3 |
| 20 | 91059-271 | TEETH SAW (255x3) | 1 | | | | 5 |
| 21 | 71037-225 | NYLON CUTTER SET | 1 | | | | 3 |
| | | | | | | | |
| | | | | | | | |